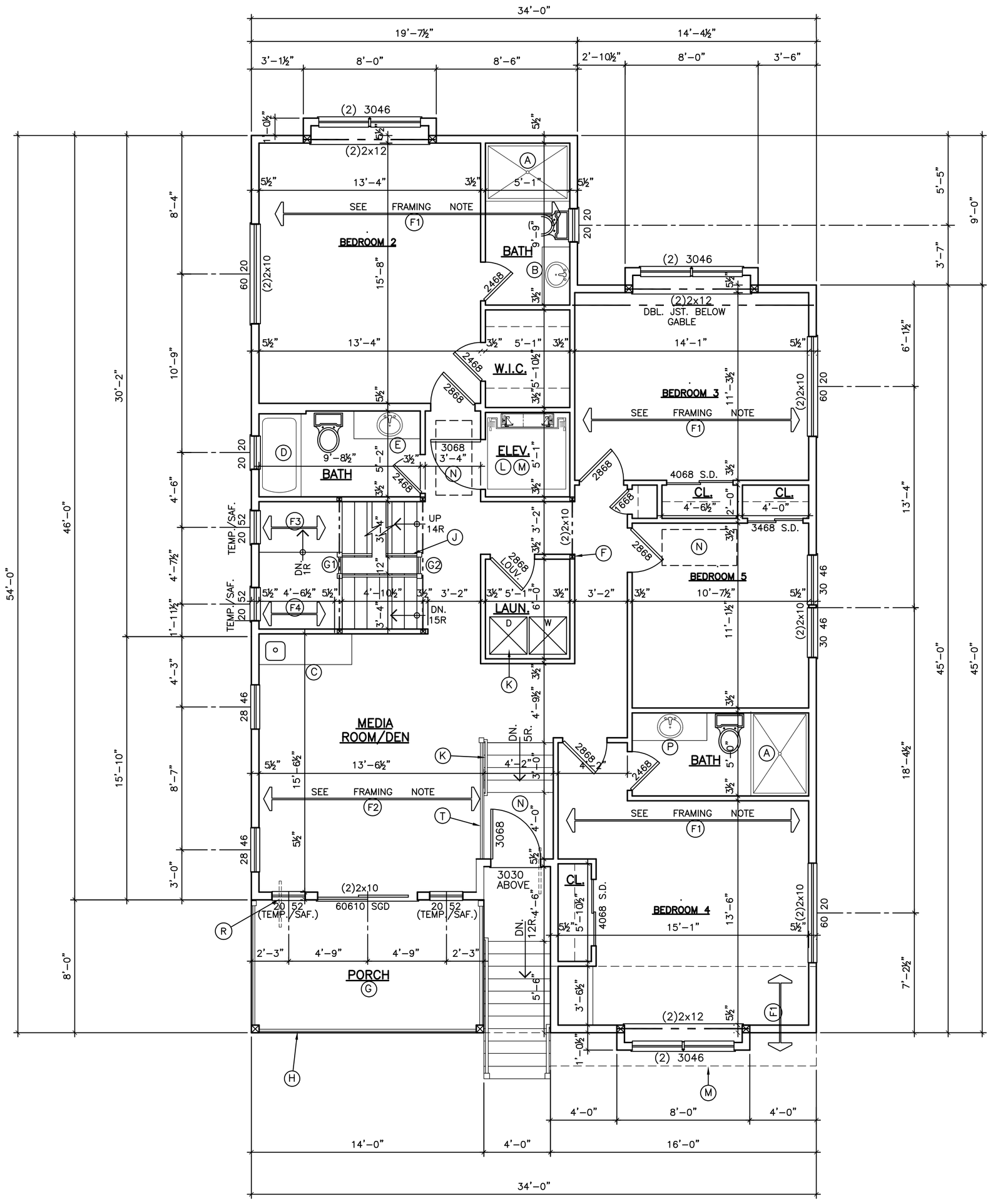

NOTE: ALL WINDOWS & DOORS SHALL BE ANDERSEN 400 SERIES.

ALIGN WINDOWS IN DINING ROOM, LIVING ROOM, & KITCHEN WITH SLIDING GLASS DOOR HEAD HEIGHT

ANY FIRST FLOOR WINDOW WITH A SILL HEIGHT LESS THAN 24" ABOVE THE FLOOR & GREATER THAN 6'-0" ABOVE THE EXTERIOR WALKING SURFACE SHALL HAVE A CHILD GUARD INSTALLED TO A MIN. HEIGHT OF 24" ABOVE THE FLOOR. THE GUARD SHALL BE INSTALLED PER MANUFACTURER'S INSTRUCTIONS AND BE REMOVABLE BY AN ADULT WITHOUT THE USE OF TOOLS. GUARDS SHALL HAVE MAX. 3⅞" CLEAR SPACE.

FIRST FLOOR PLAN 1/4"=1'-0" 09

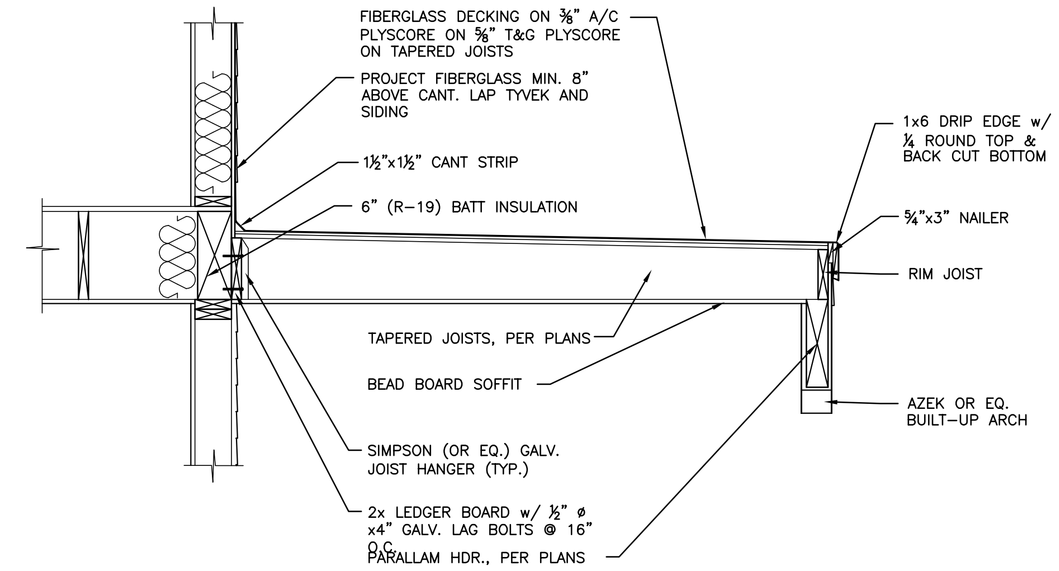

(ON TAPERED JOISTS)

FIBERGLASS (F/G) SUNDECK DETAIL SCALE: 3/4"=1'-0" 04

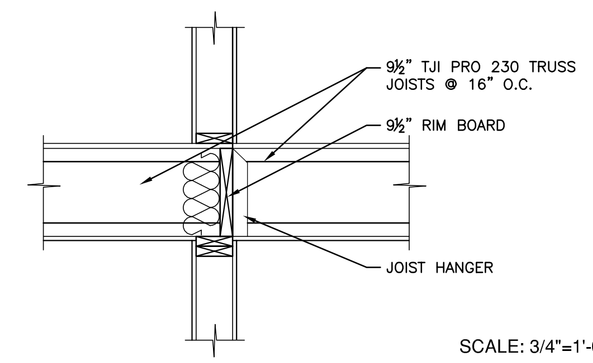

SCALE: 3/4"=1'-0"

ELEVATOR CHASE FRAMING 07

H4 3½"x9½" PARALLAM (FLUSH) FULL LENGTH

H3 (2)2x12 HDR. ON 6x6 ACQ. POST w/ STAINLESS STEEL POST BASE & CAP

H2 (2)2x8 FLUSH IN LOWER LANDING ABOVE

H1 5¼"x11⅞" PARALLAM

GIRDER NOTES 03

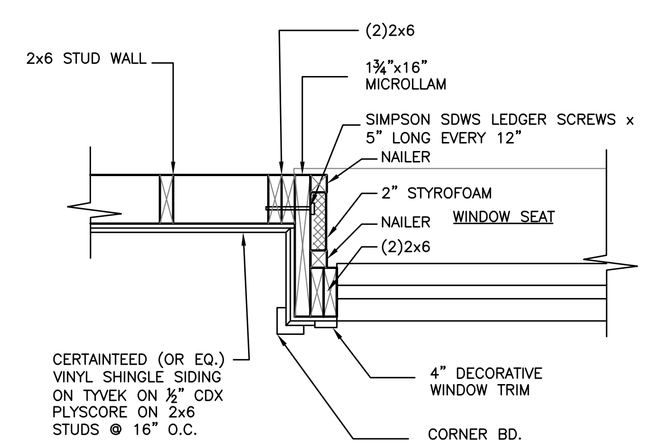

SCALE: 1"=1'-0"

DETAIL @ BOXED OUT WINDOW 06

F1 2x10 JOISTS @ 16" O.C. w/ BRD'G. @ MID-SPAN

F2 2x10 TAPERED JOISTS @ 16" O.C., TAPER 2" PER 10'-0", SEE DETAIL 04 ON THIS SHEET

F3 2x8 JOISTS @ 16" O.C., 2x8 RAFTERS @ 16" O.C.

F4 2x8 JOISTS @ 16" O.C., 4'-8" ABOVE FIRST FLOOR JOISTS

F5 2x8 TAPERED JOISTS @ 16" O.C., TAPER 1" PER 6'-0", SEE SIMILAR DETAIL 04 ON THIS SHEET

FRAMING NOTES 02

A 60"x42" TILED SHOWER

B 42" VANITY

C 66" WET BAR

D 32" x 60" TUB/SHOWER COMBINATION

E 48" VANITY

F POST HEADER FULL WIDTH MIN. TYP. AT ALL GIRDER LOCATIONS UNLESS OTHERWISE NOTED

G FIBERGLASS DECKING ON ⅜" AC PLYWOOD ON ⅝" T&G PLYWOOD ON TAPERED JOISTS

H 36" HIGH VINYL RAILING WITH BALUSTERS MAXIMUM 3⅞" APART, ALL STAIR RAILS TO BE OF GRASPABLE CONFIGURATION. ALL RAILS MUST BE CAPABLE OF RESISTING A 200 POUND LATERAL LOAD

J 36" HIGH RAILING WITH BALUSTERS MAXIMUM 3⅞" APART, ALL STAIR RAILS TO BE OF GRASPABLE CONFIGURATION

K VENT APPLIANCES TO EXTERIOR PER MANUFACTURER'S SPECIFICATIONS

L RESIDENTIAL ELEVATOR BY ACCREDITED ELEVATOR CO. (OR EQUAL). INSTALL PER MANUFACTURER'S SPECS. NOTE: VERIFY DOOR LOCATION AS REQUIRED BY ELEVATOR MANUFACTURER.

M LINE OF CANT'D DECK ABOVE

N 26"x54" ATTIC ACCESS

O 12" SIDELITE w/ TEMPERED SAFETY GLASS

P 54" VANITY

05 KEYED NOTES 01

Adamson Riva & Lepley
ARCHITECTS, AIA

124A NORTH MAIN STREET
FORKED RIVER, N.J. 08731
TEL: 609 693.9191
FAX: 609 971.1999

110 MARTER AVENUE, UNIT 303
MOORESTOWN, N.J. 08057
TEL: 856 222.4652

SCOTT C. LEPLEY, AIA
N.J. LIC. NO. 21AI00818200

FLAVIO G. RIVA, AIA
N.J. LIC. NO. 21AI01638800
PA. LIC. NO. RA403080

JOSEPH F. ADAMSON, AIA
N.J. LIC. NO. 21AI01601700
VT. LIC. NO. 2842

CONSULTANT:

CONSULTANT:

NO.	DATE	DESCRIPTION:
	12/22/25	ISSUED FOR PERMIT

PROJECT:

PROPOSED
DWELLING
FOR
CLAM COVE LLC
131 WEST MARYLAND AVENUE
BEACH HAVEN TERRACE, NEW JERSEY 08008
LONG BEACH TOWNSHIP, OCEAN COUNTY

PROJECT NO. 25076

TITLE:

FIRST FLOOR PLAN

DRAWING: A2.1

DWG. BY: REM CHKD. BY: SCL

THIS DRAWING SHALL NOT BE USED FOR CONSTRUCTION UNLESS A PROFESSIONAL'S SEAL AND SIGNATURE ARE ON THE DRAWING

COPYRIGHT © 2025 ADAMSON RIVA & LEPLEY ARCHITECTS